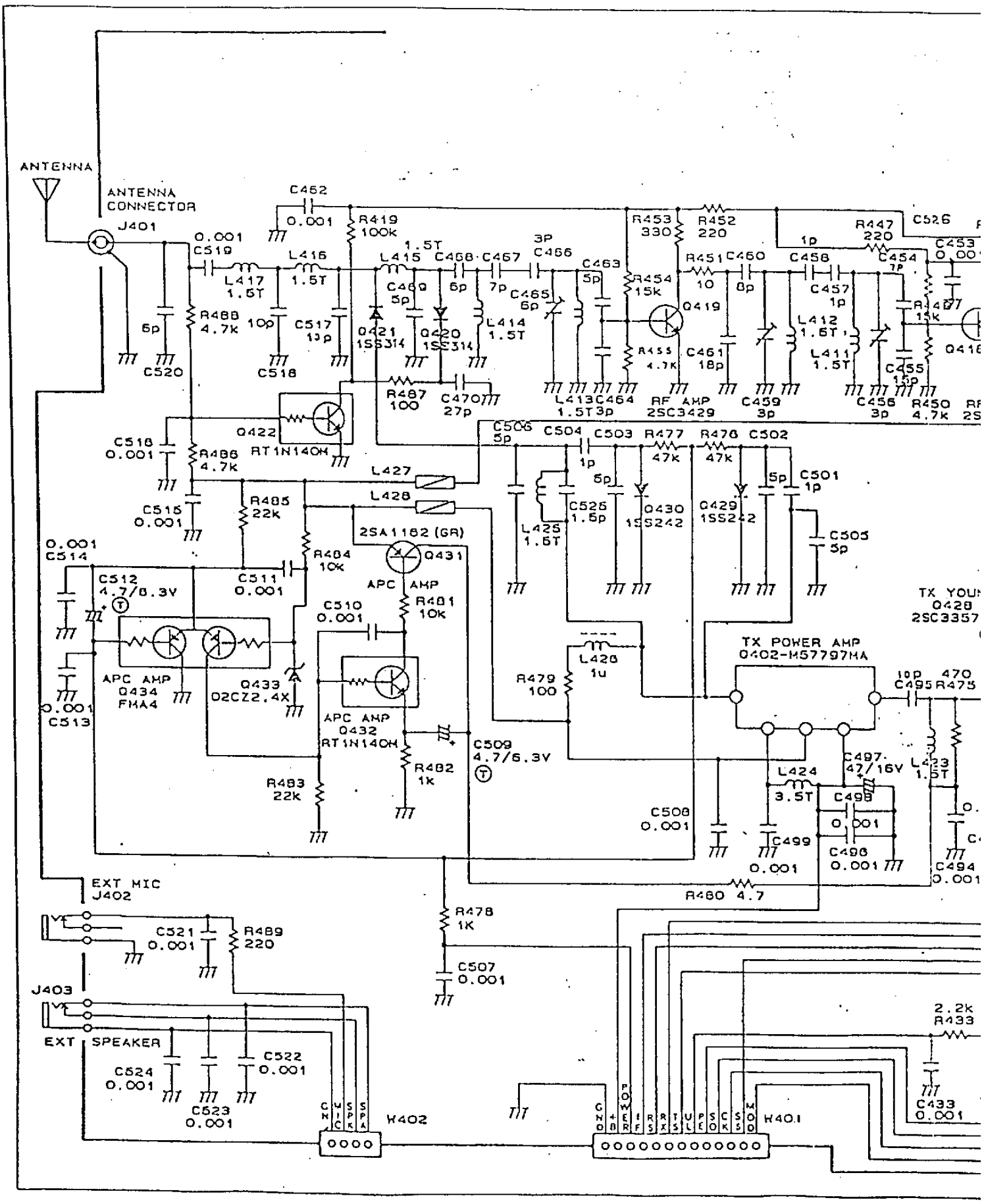
ANTENNA
ANTENNA CONNECTOR
J401
C462
0.001
R419
100k
0.001
C519
L417
1.5T
L416
1.5T
1.5T
L415
C468
C467
3P
C466
C463
5p
R453
330
R452
220
R447
220
C526
1p
R451
10
C460
8p
C458
C457
1p
C454
7p
C453
R454
15k
Q419
R455
4.7k
C461
18p
L412
1.5T
L411
1.5T
C455
15p
R447
15k
Q416
6p
C520
R488
4.7k
10p
C518
C517
13p
Q421
1SS314
C469
5p
6p
Q420
1SS314
7p
C465
6p
L414
1.5T
R487
100
C470
27p
L413
1.5T
C464
3p
RF AMP
2SC3429
C459
3p
C456
3p
R450
4.7k
Q422
RT1N140H
C516
0.001
R486
4.7k
C515
0.001
L427
L428
C506
5p
C504
1p
C503
R477
47k
R476
47k
C502
5p
C501
1p
C505
5p
L425
1.5T
C526
1.5p
Q430
1SS242
Q429
1SS242
R485
22k
2SA1162 (GR)
Q431
0.001
C514
C512
4.7/6.3V
C511
0.001
R484
10k
APC AMP
R481
10k
C510
0.001
APC AMP
Q434
FMA4
Q433
02CZ2.4X
0.001
C513
APC AMP
Q432
RT1N140H
R482
1k
C509
4.7/6.3V
R483
22k
L426
1u
R479
100
TX POWER AMP
Q402-M57797MA
10p
C495
470
R475
L423
1.5T
L424
3.5T
C497
47/16V
C498
0.001
C496
0.001
C499
0.001
C508
0.001
C494
0.001
R480 4.7
EXT MIC
J402
C521
0.001
R489
220
R478
1K
C507
0.001
J403
EXT SPEAKER
C524
0.001
C523
0.001
C522
0.001
2.2k
R433
C433
0.001
GND
MIC
SPK
SPA
K402
GND
+B
POWER
IF
RS
RX
TS
TX
PE
SQ
CK
SS
MOD
K401